TECAPRES®

Ø32mm
400daN

TPK 32

ECO SERIES

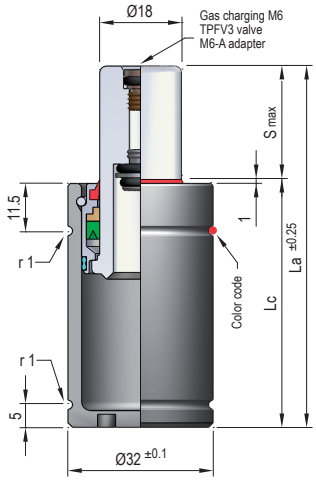

Pressure medium	Gas Nitrógeno (N_2)
Max. charging pressure	155 Bar
Min. charging pressure	25 Bar
Rod seal area	2,54 cm²
Operating temperature	0ºC - 80ºC
Force increase by temperature	0,33 %/ºC
Max. stem speed	1,2 m/s
Maintenance kit	Kit K32

PED 2014/68/UE

VDI SAFETY

RE-18-32

Maximum strokes / minute (at 20ºC)

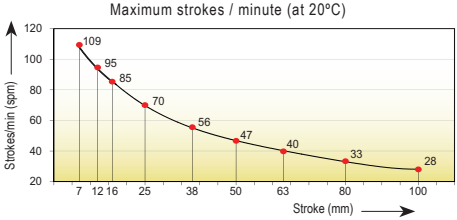

Code	Smax mm	La mm	Lc mm	V l	Kg
TPK 32x7	7	49	42	0,005	0,20
TPK 32x12	12	59	47	0,008	0,21
TPK 32x16	16	67	51	0,011	0,23
TPK 32x25	25	85	60	0,017	0,26
TPK 32x38	38	111	73	0,025	0,29
TPK 32x50	50	135	85	0,033	0,33
TPK 32x63	63	161	98	0,041	0,37
TPK 32x80	80	195	115	0,052	0,43
TPK 32x100	100	235	135	0,065	0,49

Color code	Fa daN	Fc daN	P Bar
GR *(Green)*	100 (±10)	≈ 165	40
BL *(Blue)*	200 (±15)	≈ 330	80
RD *(Red)*	300 (±20)	≈ 495	120
YW *(Yellow)*	400 (±20)	≈ 640	155
(Other forces)	65 - 400	≈ 100 - 640	25 - 155

The black color code denotes a different pressure from that which the customer could choose when ordering between the minimum charging pressure (25Bar) and the maximum charging pressure (155Bar). If not otherwise specified, the gas spring will be supplied in the yellow code version.

How to order

TPK 32 x 38 YW

Model — Stroke — Color code

Force/stroke ratio

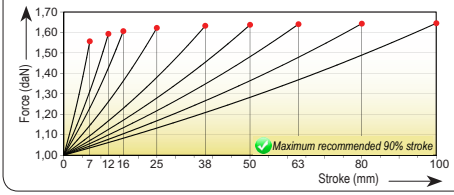

Initial force/charging pressure ratio

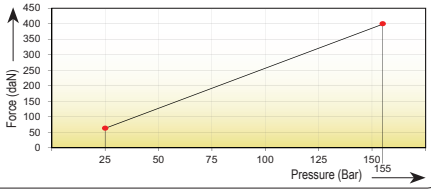

Assembly possibilities

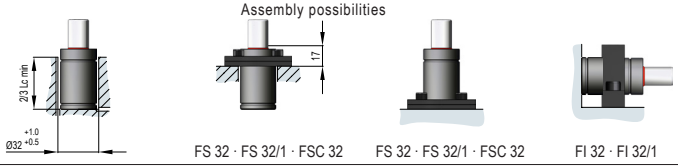

FS 32 · FS 32/1 · FSC 32 — FS 32 · FS 32/1 · FSC 32 — FI 32 · FI 32/1